A x 4

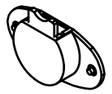

B x 4

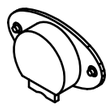

C x 16

4 x 12

D x 1

E x 2

3.5 x 15

F x 1

G x 1

H x 1

M5 x 10

Lukuga uks
Door with a lock

1

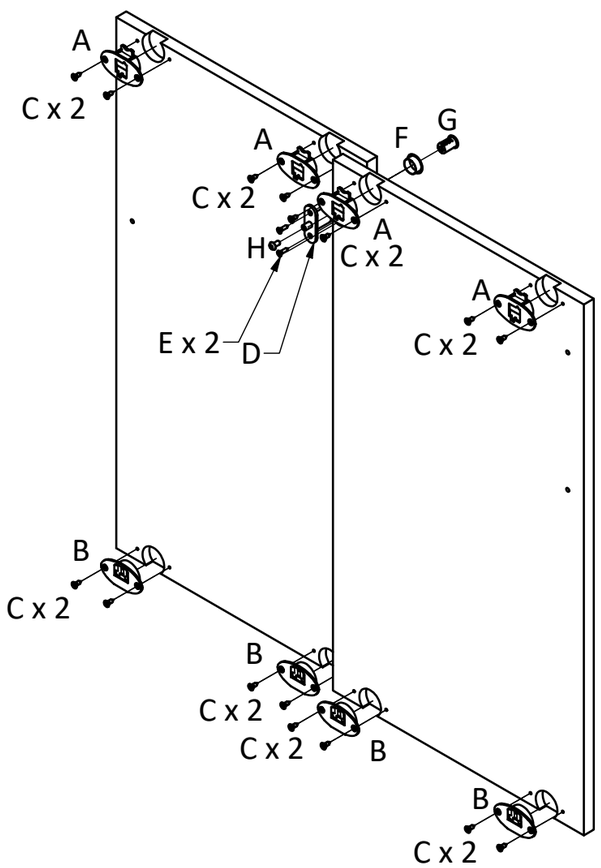

2

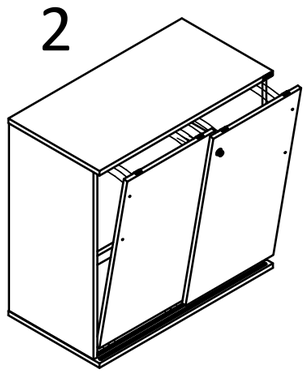

3

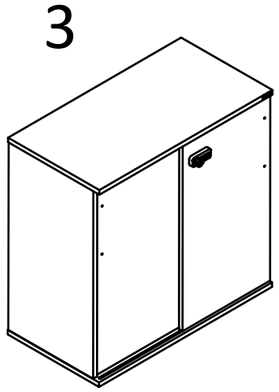

Numbrilukuga uks
Door with a number lock

1

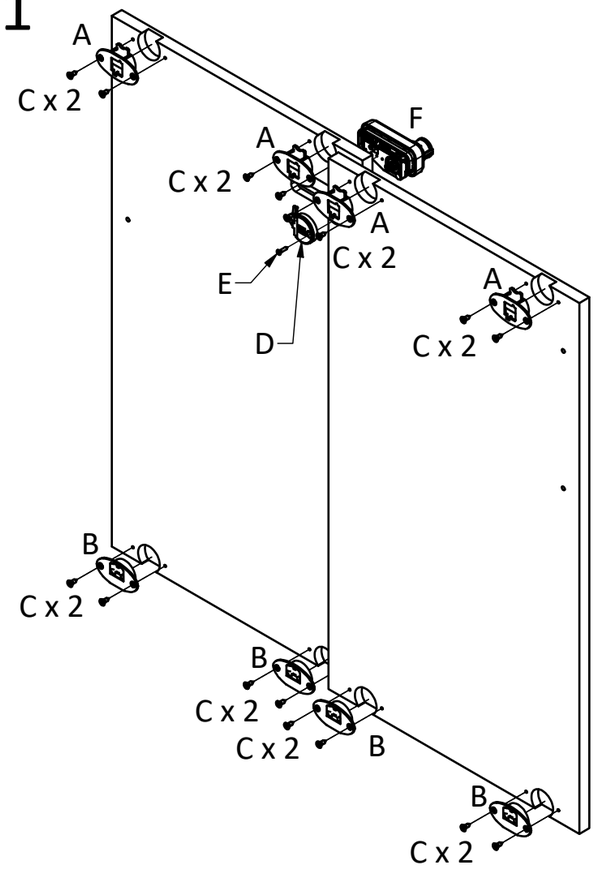

2

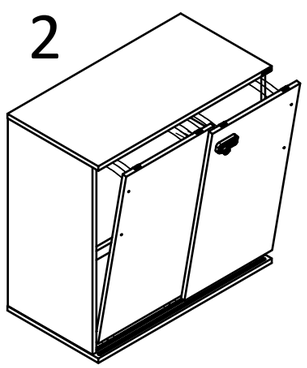

3

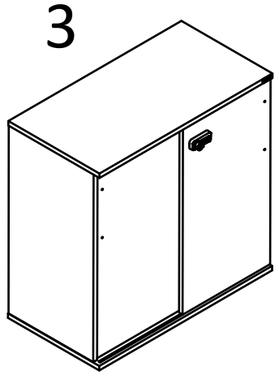

A x 4

B x 4

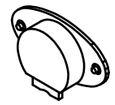

C x 16

4 x 12

D x 1

E x 1

3 x 15

F x 1

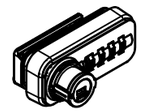

Lükanduksed
Sliding doors

STANDARD

J.E.Praks 12.08.2021