1

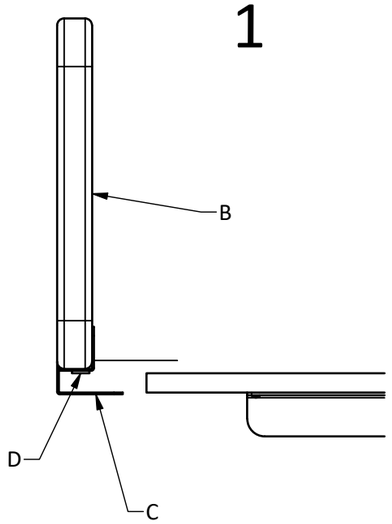


2

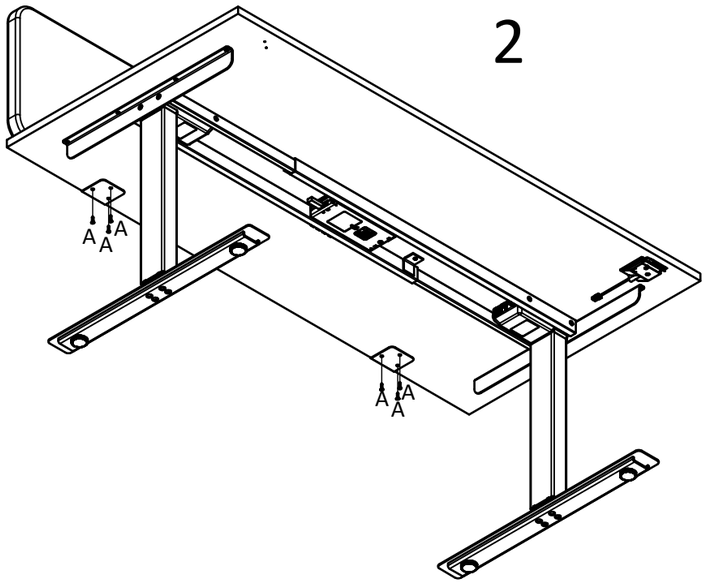


3

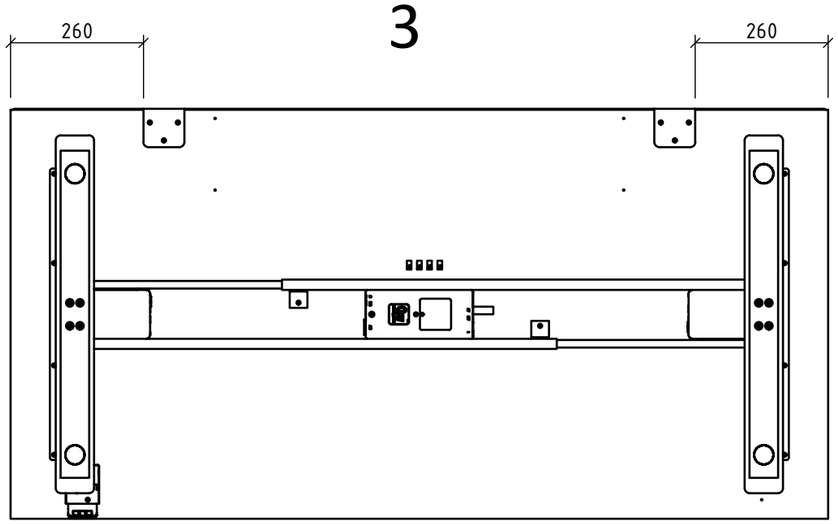


A x 6

4 x 20

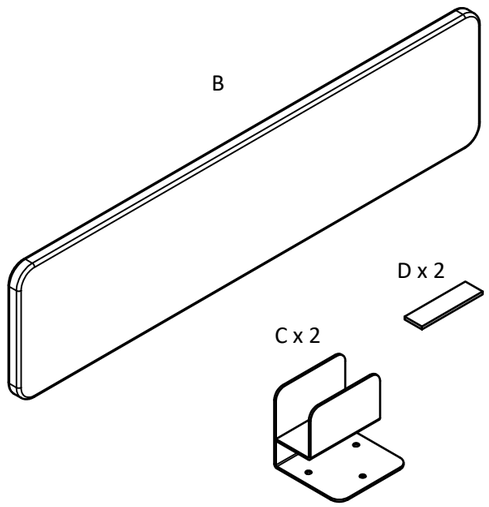


4

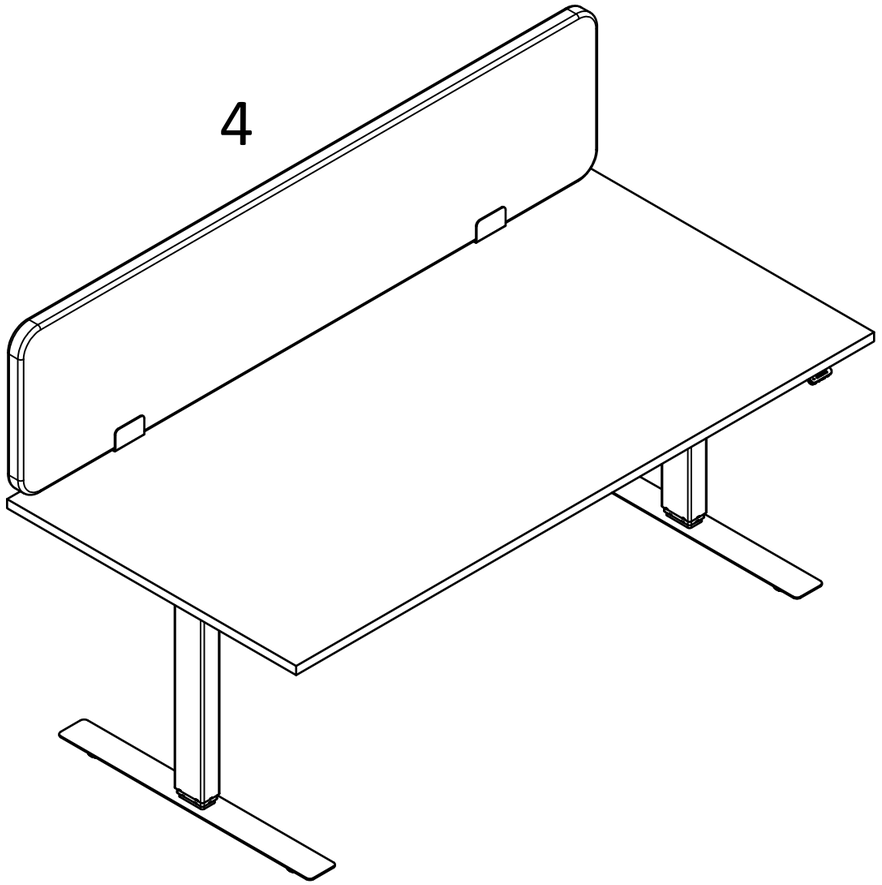

SOFT Y-kinnitusega
SOFT with Y-mount

STANDARD

J.E.Praks 22.06.2021