| | |
|---|---|
| A x 14<br>4 x 20 | |
| B x 4 | |
| C x 4<br>M6 x 12 | |
| D x 8<br>M6 x 25 | |
| E x 8<br>M6 x 16 | |
| F x 4<br>D24 | S x 2<br>4 x 50 |
| G x 4<br>D38 | H x 2<br>4 x 30 |

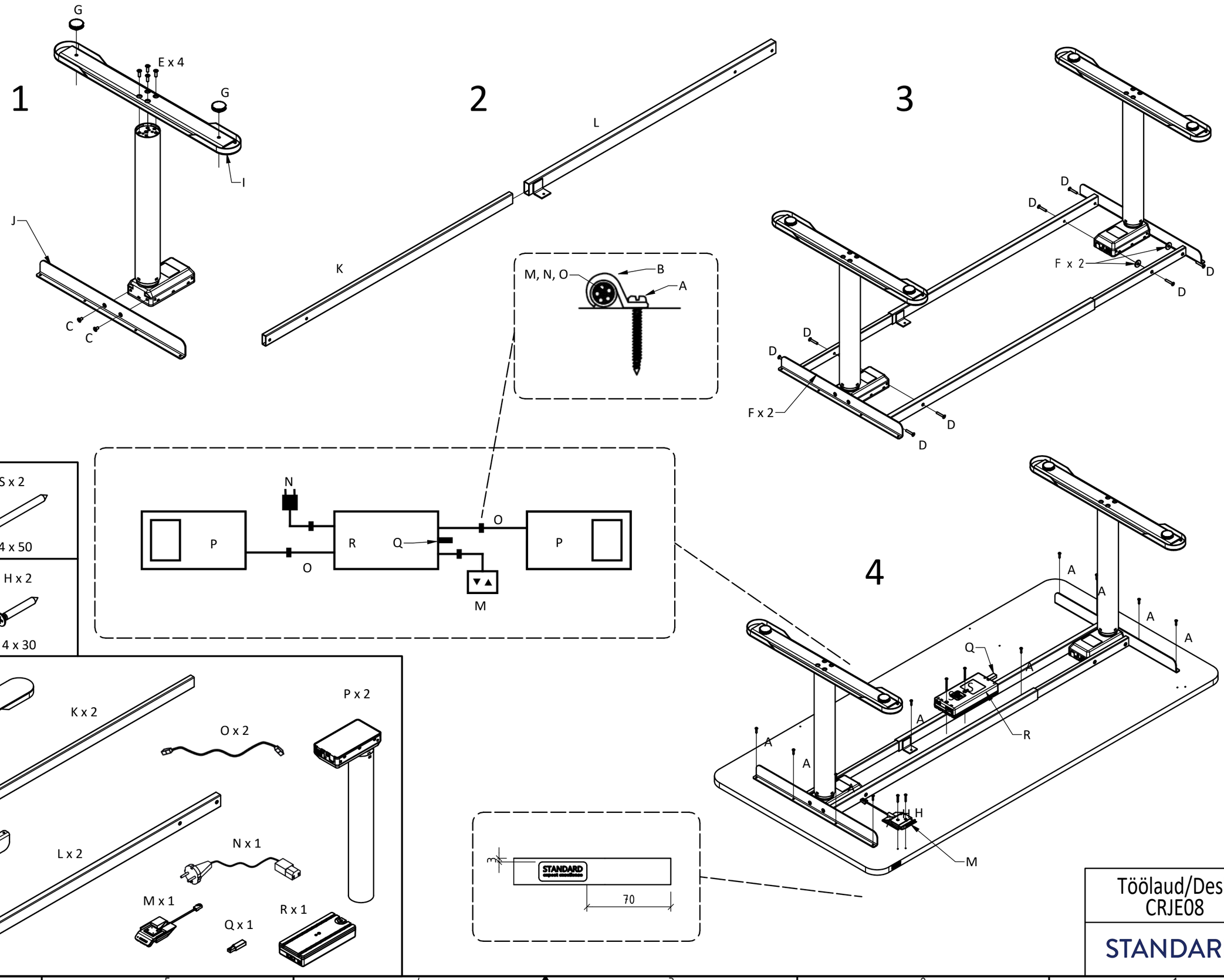


Töölaud/Desk
CRJE08

STANDARD

LLink 19.09.2023